P6101O NEW

10.4" XGA TFT Industrial Open Frame Monitor

Features

- 10.4" XGA TFT LED backlight LCD
- Supports open frame mount, wall mount and VESA arm
- Resistive touchscreen
- Full range screw-type (locked) AC-in or 12V/24V DC-in (option)
- DVI-D, VGA and HDMI with multi-signal inputs

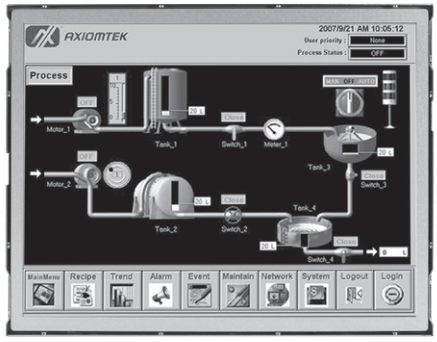

▲ Ultra-slim mechanism design

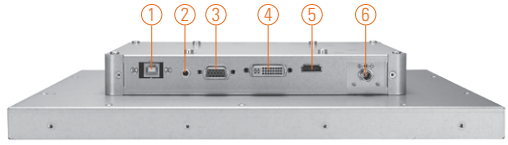

1. T/S port
2. Line-in
3. VGA
4. DVI-D
5. HDMI
6. Power

Introduction

The P6101O is an ultra slim industrial open frame monitor, which adopts 10.4-inch 350 nits XGA LED backlight LCD display and supports multi-signal interfaces including DVI, VGA and HDMI. 12/24V DC-In means it is fit for all kinds of industrial environments. Moreover, the P6101 supports open frame mount, wall mount, rack mount or VESA FPMPMI mounting. With the compact mechanism design, users can enjoy free from space constraint. It is especially suitable for POI/POS, excellent HMI and all kinds of heavy-duty industrial fields.

Specifications

Front Bezel	Open frame monitor	
Mounting	Open frame mount, wall mount and VESA arm	
LCD Panel	Display	10.4" XGA TFT LCD
	Max. Resolution	1024 x 768
	Max. Colors	16.7M
	Active Area (mm)	211.2 x 158.4
	Pixel Pitch (mm)	0.2063 x 0.2063
	Response Time	16ms
	Backlight	LED backlight
	Backlight MTBF	30,000 hrs
	Viewing Angle (H/V)	160°/160°
	Contrast Ratio	900 (TYP.)
	Brightness (cd/m^2)	350 nits
Display Control	OSD (on screen display)	
Display Mode	VGA 640 x 350 (70Hz), VGA 640 x 480 (60/72/75Hz), VGA 720 x 400 (70Hz), SVGA 800 x 600 (60/72/75Hz), XGA 1024 x 768 (60/72/75Hz)	

Updated Mar. 24, 2017. * All specifications and photos are subject to change without notice.

Specifications

Input Signal	DVI-D VGA HDMI Touchscreen: Serial RS-232 or USB interface	
I/O Connectors	1 x RS-232 or USB for touchscreen version 1 x DVI-D 1 x VGA 1 x HDMI 1 x Screw-type DC power input	
Power Adapter	Screw-type external AC/DC power adapter	
Power Consumption	TBD	
Touchscreen	Thickness	Resistive: 3.2 mm
	Light Transmission	Resistive: 80%
	Power Consumption	Resistive: +5V @ 100mA
	Touch Life	Resistive: 35 million touches Controller interface: RS-232 D-type 9-pin male connector or USB
Dimensions	246.3 mm (9.7") (W) x 44.9 mm (1.77") (D) x 192.3 mm (7.57") (H)	
Packing Dimensions	362 mm (14.25") (W) x 165 mm (6.5") (D) x 397 mm (15.63") (H)	
Weight (net/gross)	TBD	
Environment	Operating temperature: -10°C ~ +55°C (+14°F ~ +131°F) Relative humidity: 20% ~ 90% @ 40°C, non-condensing	
Packing List	1 x VGA cable 1 x RS-232 or USB cable for touchscreen (for touch version) 1 x Audio cable 1 x EU/US power cord (for AC version)	
Certificate	CE	

Ordering Information

AC Power	Resistive (RS-232)	P6101OR-AC-RS-US-EU
	Resistive (USB)	P6101OR-AC-U-US-EU
	Glass	P6101ON-AC-US-EU
12V/24VDC Power	Resistive (RS-232)	P6101OR-DC-RS
	Resistive (USB)	P6101OR-DC-U
	Glass	P6101ON-DC

Optional Accessories

5946L203800E	HDMI cable
59461713400E	DVI cable
82231770050E	Wall mount kit
E226171106	Desktop stand

Dimensions

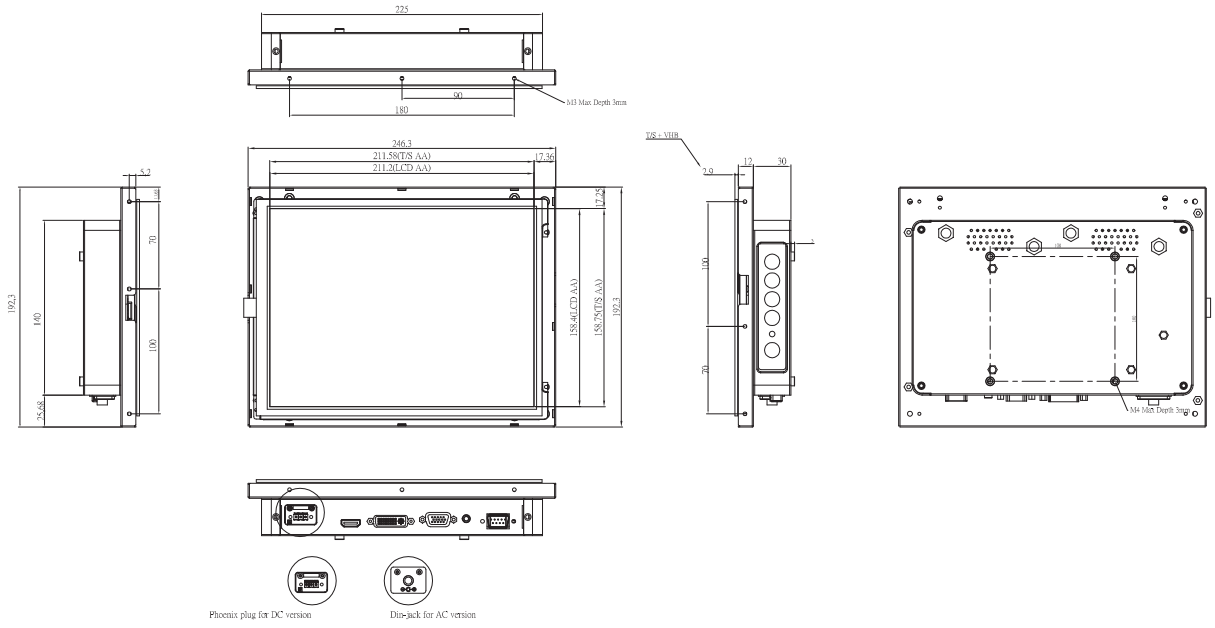

* All specifications and photos are subject to change without notice.

© 2017 Axiomtek Co., Ltd. All rights reserved.